Industrial Power System Protective Relays and Coordination – Considerations for Modern Applications

Presenter: Rasheek Rifaat, P.Eng, IEEE Life Fellow

A Presentation to IEEE – Joint PES/IAS Southern Alberta Section
June 8, 2021

IEEE
Celebrating 125 Years
of Engineering the Future

IEEE SAS 2021-06-08 - Copyright: IEEE

Abstract:

- A quick review of
  - Principles and basic aspects of protection and coordination of industrial and distribution power systems
  - Protection of systems and major components
  - Fault currents and voltages in symmetrical and asymmetrical conditions, symmetrical component analysis
- Historical evolvement of protective relays reaching the current Numerical, Multifunction relays and Intelligent Electronic Devices (IED's).
- Protection Application Examples for Main System Components: Generators, Transformers, Buses and Breakers, Feeders, Short Lines, Motors, and other system components
- Coordinating protection of main component of modern distribution and industrial systems
- Applications of communications for permissives, blocking, conditional operations and other coordination techniques in modern systems.
- Concerns in setting and testing of smart relays and systems.
- Q & A

IEEE SAS 2021-06-08 - Copyright: IEEE

Presentation Main References (Standards / Books)

- Main Reference :IEEE Buff Book™ IEEE Std 242
- IEEE Standards Series 3004™
- IEEE Brown Book™ IEEE Std 399
- Industrial Power Systems Handbook: Beeman
- Industrial Power Systems: Shoab Khan
- Power System Protection: Paul Anderson
- A complete list will be available in a hard copy format
- IEEE/IAS Presentation 2009

IEEE SAS 2021-06-08 - Copyright: IEEE

Presentation Main References (Papers)

- Generator Grounding
- Bailey
- Shipps
- Bus Protection WG paper
- A complete list will be available in hard copy format

IEEE SAS 2021-06-08 - Copyright: IEEE

Examples of Protected System Components

- Generator
- Transformer
- Bus and transfer
- Feeder
- Motor

IEEE SAS 2021-06-08 - Copyright: IEEE

Special Considerations:

- 3 Phase Faults
- Phase to Ground Fault Protection
- Arc Flash

IEEE SAS 2021-06-08 - Copyright: IEEE

Excerpts from Mason's Book "The Art and Science of Protective Relays:

- The function of protective relaying is to cause the prompt removal from service of an element of a power system when it suffers a short circuit or when it starts to operate in any abnormal manner that might cause damage or otherwise interfere with the effective operation of the rest of the system.

IEEE SAS 2021-06-08 - Copyright: IEEE

- As we continue to advance in making and applying protective devices Overcurrent Protection and Coordination shall be:
  - More Science
  - Less Art!!

IEEE SAS 2021-06-08 - Copyright: IEEE

Protection Characteristics

- Reliability:
  - Dependability: correct device/relay operation: (should operate ONLY when required)
  - Security: against incorrect device/relay operation (should not operate unnecessarily)
- Speed
- Selectivity
- Economics

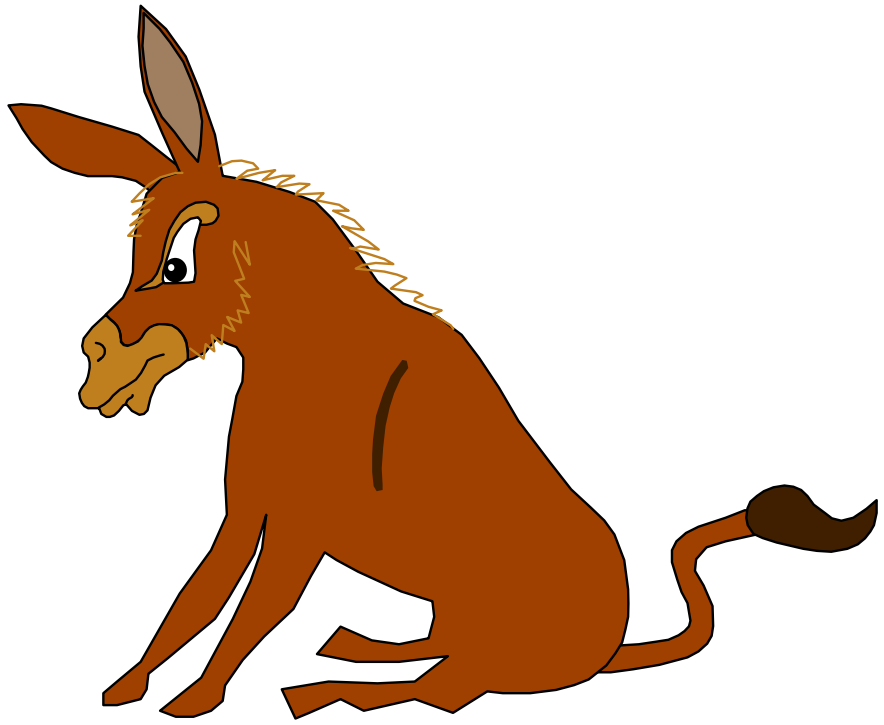

What about Consistency?

IEEE SAS 2021-06-08 - Copyright: IEEE

Protection Reliability

- Dependability: Must Operate When Required
  - Proper system design
  - Backup
    - To operate when main system fails
    - To cover any parts that may fall in-between protected zones (fall in the cracks)
  - Reliability of hardware. Testing and in-service proven history (How you can get that in a fast changing world?)
  - Reliability of software (software testing and checking)
  - High quality protection system design
  - Appropriate settings

IEEE SAS 2021-06-08 - Copyright: IEEE

Protection Reliability (Continued)

- Security: against incorrect relay/device operation (must NOT operate unnecessarily)
- Unit Protection System: able to detect and response to faults within the Protection Zone
- Non-unit Protection System: depends on correlated and coordinated responses to establish selectivity (i.e. Time-Overcurrent)

IEEE SAS 2021-06-08 - Copyright: IEEE

Some Aspects of Relay Selectivity:

- Discrimination (location of fault, type of fault) by different methods (Examples):
  - Time
  - Current Magnitude
  - Distance (V/I)
  - Time + Current Magnitude
  - Time + Distance
  - Time + Direction of Current

IEEE SAS 2021-06-08 - Copyright: IEEE

Some Modes of Failures in Protection Systems

- Failure of current or voltage signal to the relays.
- DC supply failure
- Failure of relay itself:
  - Relay Hardware Components
  - Software Failure
  - Power Supply Failure
- Failure of a Fuse
- Failure of Circuit Breaker (tripping circuit or mechanism, or signal to trip the breaker)
- Miscoordination

IEEE SAS 2021-06-08 - Copyright: IEEE

Application Example: Overcurrent Protection for Transformers

- Thermal Damage
- Mechanical Damage
- IEEE Standards C57-109™(1993) IEEE Guide for Liquid-Immersed Transformer Through-Fault-Current Duration
- IEEE Standards C37-91™ IEEE Guide for Protective Relay Applications to Power Transformers
- Challenges:
  - Low current when number of shorted turns is small
  - High Inrush (if not provided by supplier, typical used 12 Times – 0.1 s)
- Protection using relays or fuses

IEEE SAS 2021-06-08 - Copyright: IEEE

Application Example: Protection for Generators

- See the IEEE Guide for AC Generator Protection IEEE Std C37.102™ 2006)
- Generator is composed of many sub-systems: stator, rotor, exciter, mechanical drive
- Using multiple functions such as:
  - Differential
  - Stator Ground Fault
  - Negative Sequence
  - Failure of cooling system
  - Field winding protection
  - Loss of field
  - Unbalanced current
  - Overexcitation
  - Reverse power
  - Volt to frequency
  - Backup protection (Z, 51V)

IEEE SAS 2021-06-08 - Copyright: IEEE

Application Example: Overcurrent Protection for Conductors

- IEEE Standard 3004.7 to be published soon.
- Continued O/C Causes Heat Damage
- Through Fault Currents (High Short Circuit Currents)
- Cable Damage Curves
- Where:
  - A: Conductor area in cmil
  - T: SC duration
  - T1: Max Operating Time (in this case: 105 ° C)
  - T2 Max SC Temperature rating of conductor (in this case: 205°C)

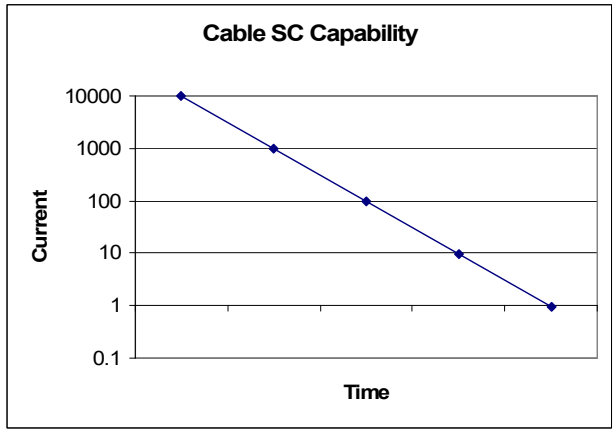

$$\left[\frac{I_{SC}}{A}\right]^2 t = 0.0297 \log_{10}\left[\frac{T_2 + 234}{T_1 + 234}\right]$$

IEEE SAS 2021-06-08 - Copyright: IEEE

Application Example: Blocking Scheme – Bus Protection

M= Main,
T= Tie
F= Feeder,
R= Relay
52= Breaker

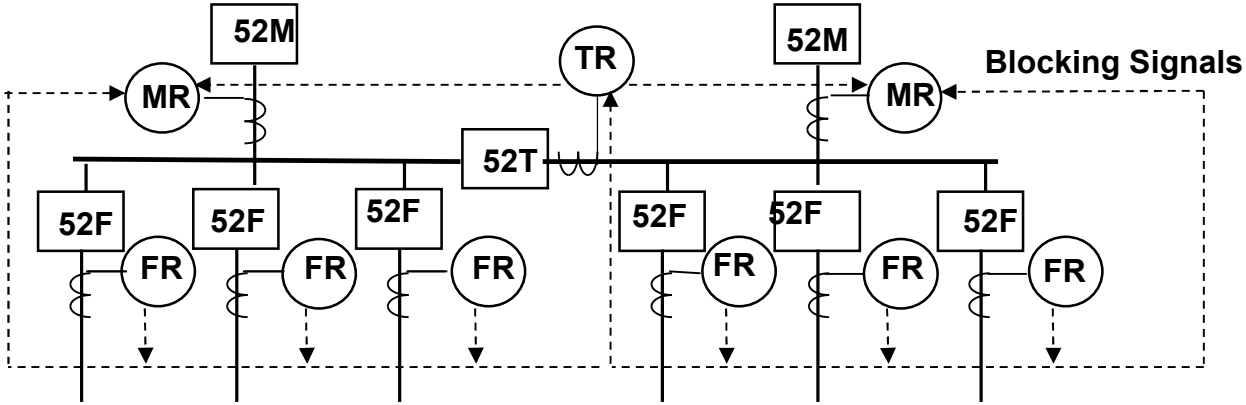

- Scheme uses digital signals from down-stream relays on the feeder breakers to block relays on main and tie breakers if the fault is outside the bus zone
- Modern communications between relays allow a short delay (50 milliseconds) to be sufficient for a stable system operation.

IEEE SAS 2021-06-08 - Copyright: IEEE

Application Example: Safety Concerns – Ground Fault Protection:

- Why Grounding is important?
  - 90% of faults are line to ground
  - Safety of workers
    - Electric shocks
    - Arc flash
    - Transfer potential
  - Safety of equipment
  - Operation of protective devices (detecting and isolating of faulted circuits)
  - Quick action to avoid development into multiple phase with much higher currents, arc flash and sever damages

IEEE SAS 2021-06-08 - Copyright: IEEE

Accelerating Protection to Reduce Arc Flash Incident Energy

- Bus Protection
- Maintenance Switch
- Bus Arcing monitor (Protection Function?)

IEEE SAS 2021-06-08 - Copyright: IEEE

Other monitoring functions (i.e. PD), how will they fit in MF modern protection schemes?

IEEE SAS 2021-06-08 - Copyright: IEEE

Simplicity as an additional Important Characteristic of Protection Systems

- ***Word of wisdom from an (old) experienced man: "Avoid unnecessary complications to the system: The more guts you have the more belly aches"***
- ***How to reduce complicity in the era of multi-function relays?***

IEEE SAS 2021-06-08 - Copyright: IEEE

Relay Setting in the Past:

- In the era of electromagnetic relays, settings were done by tap adjustment.
- Repeat relays and hard-wired logics were used to provide interlocking and control functionality.
- Every relay covers only one function for only one phase
- In general; more space, more power supply, more burden on current and potential transformers
- Use taps to set a relay. Test to fine tune it
- Relay needed frequent testing as mechanical parts needed adjustments

IEEE SAS 2021-06-08 - Copyright: IEEE

Relay Setting Programs:

- Setting by the use of a lap top computer, setting program and interface
- In numeric relays “all the eggs are in one basket”
  - Multiple functions
  - Multiple phases, and
  - Relay logic
- Errors in relay settings could paralyze the protect scheme of the power system and equipment
- Relay Setting Programs are developed to minimiz errors in setting the relays (and lay the blame only on the engineer)

IEEE SAS 2021-06-08 - Copyright: IEEE

Relay Setting Programs:

- In addition to the comparator functions being numerically performed, the relay does additional calculations such as calculating primary current, and phase angle difference in delta-WYE transformers
  - For these additional functions, we need to input the CT ratio, PT ratio, power transformer phasing etc
- The relay also includes capability to perform logic checks:
  - For this purpose the logic needs to be input

IEEE SAS 2021-06-08 - Copyright: IEEE

Tips, Tricks and Traps:

- Almost all well known numerical relay suppliers developed their own software for settings relays and other functions. Let us first look at few of them, them examine associated Tips, Trick and TRAPS for two of them.

IEEE SAS 2021-06-08 - Copyright: IEEE

Relay Settings by Supplier's Custom Software:

- Develop settings offline
- View and change settings for enabled elements only
- Automatically check interrelated settings
- Automatically highlight out-of-range settings
- Transfer settings files using a PC communications link
- More than one group setting in some relays
- Building logics
- Actual settings back to computer for records
- Friendliness

IEEE SAS 2021-06-08 - Copyright: IEEE

Multiple Function designations in IEEE Standards C37.2:

- Overall Relay Designation
- Separate function designation

IEEE SAS 2021-06-08 - Copyright: IEEE

Coordination The Old Way – and Change of Time

- For Many Years, Time Overcurrent Coordination Was Performed Using a Light Table
- A Log (X Axis)-Log (Y-Axis) Green Graph Paper was superimposed on manufacturer's supplied curves and the Subject O/C Graphs were Obtained

IEEE SAS 2021-06-08 - Copyright: IEEE

Setting Modern Protective Relays

- Two types of programs:
  - Relay Coordination programs
  - Relay setting programs

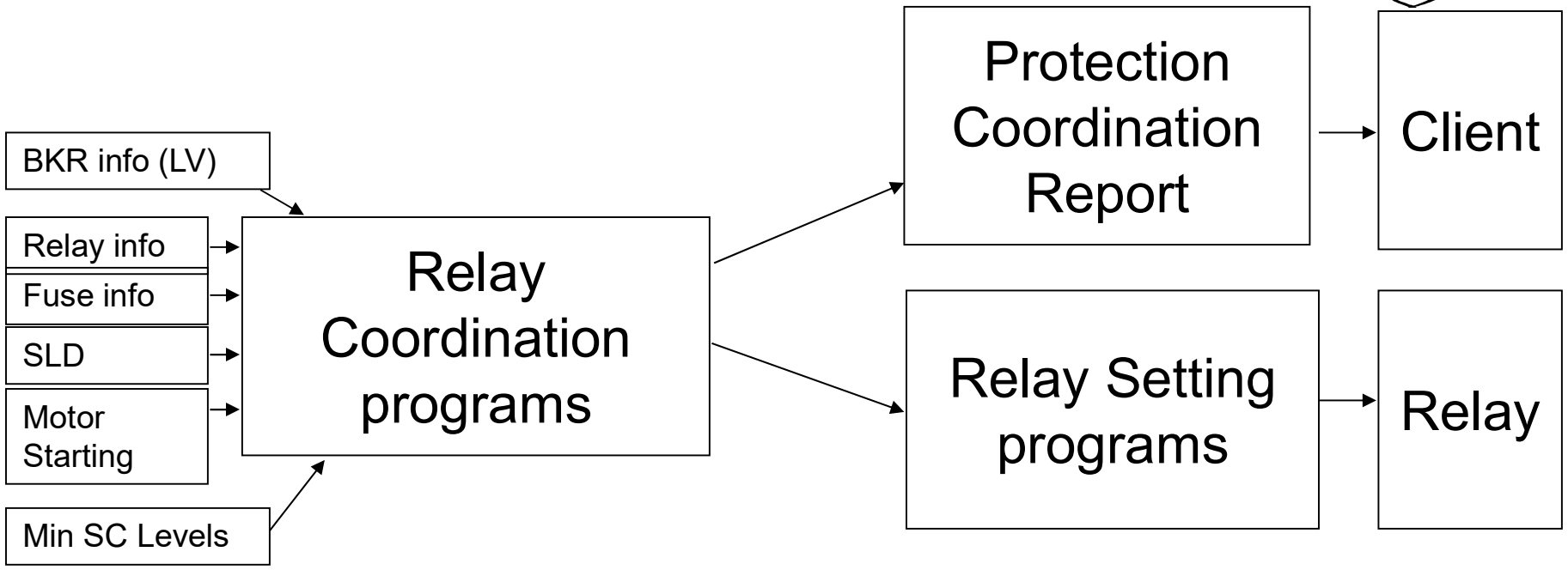

IEEE SAS 2021-06-08 - Copyright: IEEE

Information Required for Coordination Studies

- In Section 15.2 of the IEEE Brown Book™ (IEEE Std 399) it was stated that whether the coordination is done manually or by computer, it is necessary for the engineer to "describe" the system. The information needed to perform a coordination study is a single line diagram showing the following:
  - Protective device manufacture and type
  - Protective device ratings
  - Trip settings and available range
  - Short-circuit current at each system bus (three-phase and line-to-ground)
  - Full load current of all loads
  - Voltage level at each bus
  - Transformer kVA, impedance and connections (delta-wye, etc.)
  - Current transformer (CT) and potential transformer (PT) ratios
  - Cable size, conductor material, and insulation
  - All sources and ties

IEEE SAS 2021-06-08 - Copyright: IEEE

Notes on Coordination Studies

(Excerpts from the IEEE Brown Book™ (IEEE Std 399) Section 15.2

a. Note motor horsepower, full load current, acceleration time and locked rotor current
b. For each protective device: note short circuit current, full load current, and voltage level at each device. List device manufacturer and type, and program file name for device
c. For each low-voltage breaker, indicate long time, short time, instantaneous. Note settings if existing device
d. For each fuse, note rating
e. For each relay, note tap range, CT ratio, tap and time dial, if known, and whether relay has instantaneous setup
f. For each transformer, note kVA, fan cooled rating, impedance, and transformer connection.
g. For cable damage curves: note cable size, conductor material and cable insulation.

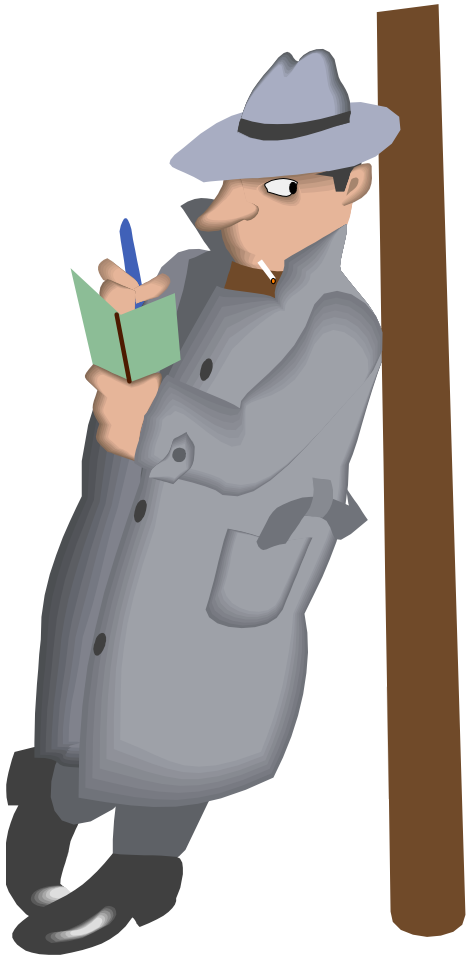

IEEE SAS 2021-06-08 - Copyright: IEEE

- Discussion
- Questions

IEEE SAS 2021-06-08 - Copyright: IEEE